Deutsche Qualität
German quality

SMART4FLOOR

Deutsche Qualität - German quality



CATALOGUE 2026

Components for water-based Underfloor Heating

We build the future


Ball valves


Flow meters


U-clips

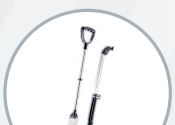
Tacker


Holding pins


Foil clips


Mesh clips

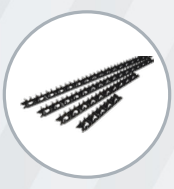
Rails


Bends


Screedflex

SMART4FLOOR
Am Bornrain 17a · 35091 Cölbe · Germany

www.smart4floor.de

Edit 2026 12 01B

Contents

SMART 4 FLOOR
Deutsche Qualität - German quality

	Stainless steel manifold PTSE-N1	p. 1–2
	SMART Flow Meter	p. 3–4
	Manifold ball valves 1"	p. 5–10
	SMART U-clips – Clip Standard 40, Clip Standard 60, Clip Premium 35	p. 11–13
	SMART OMEGA CLIP 50	p. 14
	SMART Tacker	p. 15–18
	SMART Holding pins – 42 mm and 62 mm	p. 19–20
	SMART Foil clip	p. 21
	SMART Plastic lock	p. 22
	SMART Mesh clips – for 16/17 and 20 mm pipes on reinforcement mesh	p. 23–24
	SMART Rails – holding rail for pipes 16 to 20 mm	p. 25
	SMART Bends – 90° bend support	p. 26
	SMART Screedflex – screed measuring points	p. 27–28

Prices on request – please ask for our current price offer. Technical changes reserved.

SMART4FLOOR · Am Bornrain 17a · 35091 Cölbe · Germany
Tel.: +49 176 56821380 · Email: sales@smart4floor.de · www.smart4floor.de

PRODUCT CODES

PTSE-N1-02 to PTSE-N1-18

Deutsche Qualität - German quality

STAINLESS STEEL MANIFOLD WITH MANUAL KEY-OPERATED VENT PTSE-N1

INTENDED USE

The SMART stainless-steel manifold is engineered to distribute heating fluid throughout underfloor heating systems. It allows for precise flow control in each circuit, ensuring efficient and reliable operation of the entire system.

PRODUCT ADVANTAGES

- Corrosion resistance – Thanks to high-quality stainless steel, the manifolds ensure long lasting and reliable performance even in demanding conditions
- Easy installation and servicing – The design allows for quick assembly and easy connection of underfloor heating circuits
- Precision manufacturing – Advanced CNC machines and assembly robots guarantee top quality and accuracy of every component

TECHNICAL SPECIFICATIONS

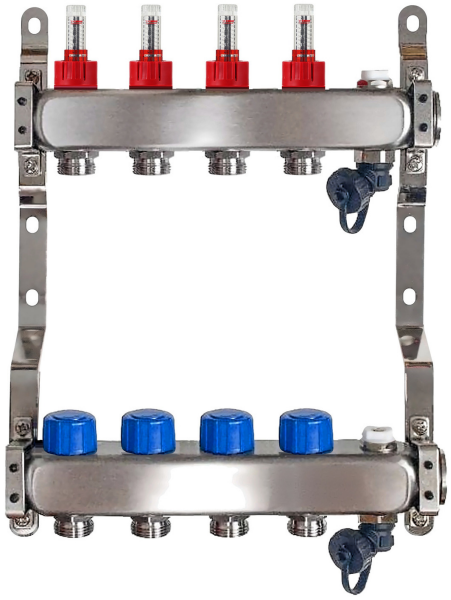

Parameter	Value
Maximum Temperature	60°C
Maximum Pressure	0,6 MPa
Number of sections	2-18
Connection diameter of the manifold bar	1"
Hole diameter in the manifold bar	1/2"
Manifold profile height	40 mm
Section spacing	50 mm
Thread of thermostatic insert	M30x1.5
Material of bars Corrosion -resistant steel grade	SUS 304 / 1.4304

SMART4FLOOR · Am Bornrain 17a · 35091 Cölbe · Germany
Tel.: +49 176 56821380 · Email: sales@smart4floor.de · www.smart4floor.de

Deutsche Qualität - German quality

STAINLESS STEEL MANIFOLD WITH MANUAL KEY-OPERATED VENT PTSE-N1

Product code	Number of heating circuits (sections)	d (mm)	D (mm)	h, mm	H, mm	L, mm	N, mm	k, mm
PTSE-N1-02	2	35	70	235	334	204	50	38
PTSE-N1-03	3	35	70	235	334	254	50	38
PTSE-N1-04	4	35	70	235	334	304	50	38
PTSE-N1-05	5	35	70	235	334	354	50	38
PTSE-N1-06	6	35	70	235	334	404	50	38
PTSE-N1-07	7	35	70	235	334	454	50	38
PTSE-N1-08	8	35	70	235	334	504	50	38
PTSE-N1-09	9	35	70	235	334	554	50	38
PTSE-N1-10	10	35	70	235	334	604	50	38
PTSE-N1-11	11	35	70	235	334	654	50	38
PTSE-N1-12	12	35	70	235	334	704	50	38
PTSE-N1-13	13	35	70	235	334	754	50	38
PTSE-N1-14	14	35	70	235	334	804	50	38
PTSE-N1-15	15	35	70	235	334	854	50	38
PTSE-N1-16	16	35	70	235	334	904	50	38
PTSE-N1-17	17	35	70	235	334	954	50	38
PTSE-N1-18	18	35	70	235	334	1004	50	38

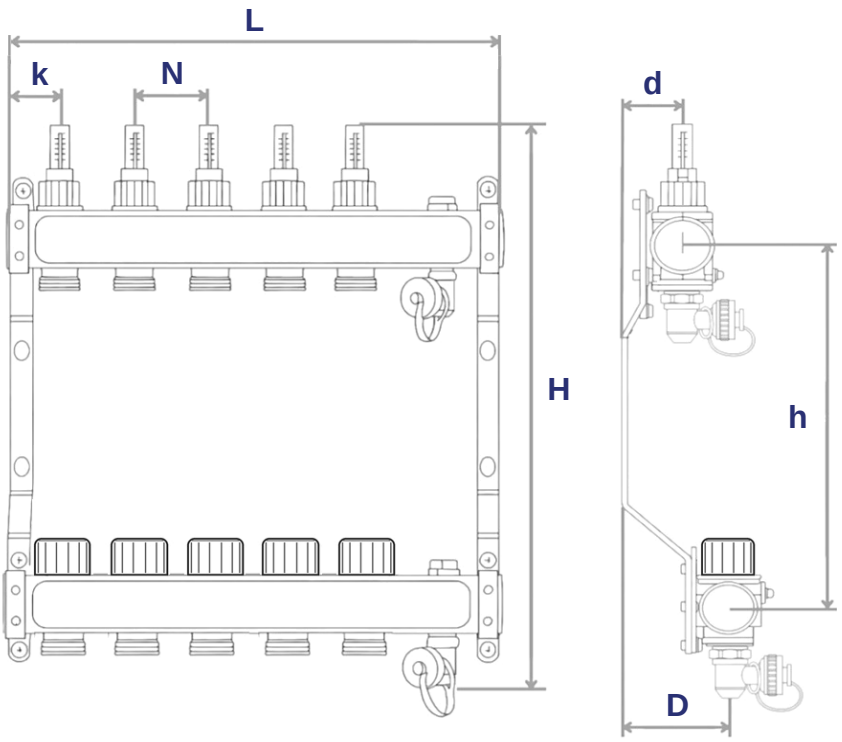

SMART4FLOOR · Am Bornrain 17a · 35091 Cölbe · Germany
Tel.: +49 176 56821380 · Email: sales@smart4floor.de · www.smart4floor.de

SMART FLOW METER

INTENDED USE

Flow meter for underfloor heating manifolds. It measures the water flow in each heating circuit, for efficient management and control of the heating system and better overall performance.



PRODUCT ADVANTAGES

- Precise flow measurement for optimising the system
- Resistant to high temperatures and pressure
- Clear flow indicator, easy to read
- Quick installation into existing heating systems

TECHNICAL SPECIFICATIONS

Parameter	Value
Function	Measurement of the water flow per heating circuit
Material	High-quality plastic, resistant to corrosion and high temperatures
Design	Clear flow indicator
Maximum temperature	60 °C
Maximum pressure	0,6 MPa
Nominal diameter	DN 15
Allowed medium	Water with glycol (up to 50 % glycol)
Adjustment range	2,5 l/min or 5 l/min
Flow meter weight	25 g
Nipple weight	45 g
Packaging	Bulk, 100 pcs

SMART4FLOOR · Am Bornrain 17a · 35091 Cölbe · Germany
Tel.: +49 176 56821380 · Email: sales@smart4floor.de · www.smart4floor.de

SMART FLOW METER

COMPONENTS AND MATERIALS

No.	Name	Material	Colour
1	Valve body	PPA	black
2	Black core	EMS-GV-5H	black
3	Glass tube	EMS-TR55	transparent
4	Positioning ring	PC	red
5	Red ring	PA66	red
6	O-ring	EPDM 70°	black
7	Black rod	PPS	black
8	Cap	POM	black
9	O-ring	EPDM 70°	black
10	O-ring	EPDM 70°	black
11	O-ring	EPDM 70°	black
12	O-ring	EPDM 70°	black
13	O-ring	EPDM 70°	black
14	Sealing pad	EPDM 70°	black
15	Spring	SS304	—

TECHNICAL DRAWING

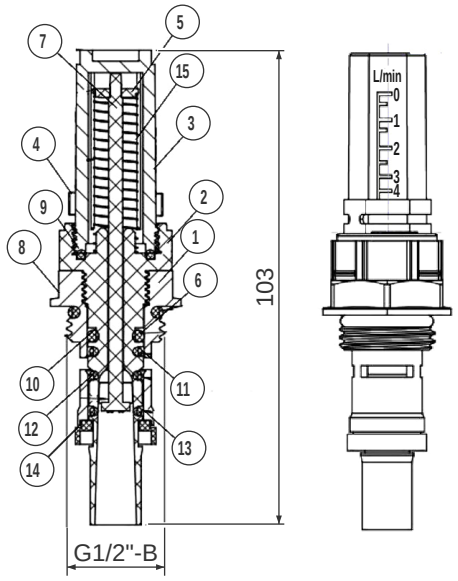

PRESSURE LOSS DIAGRAM

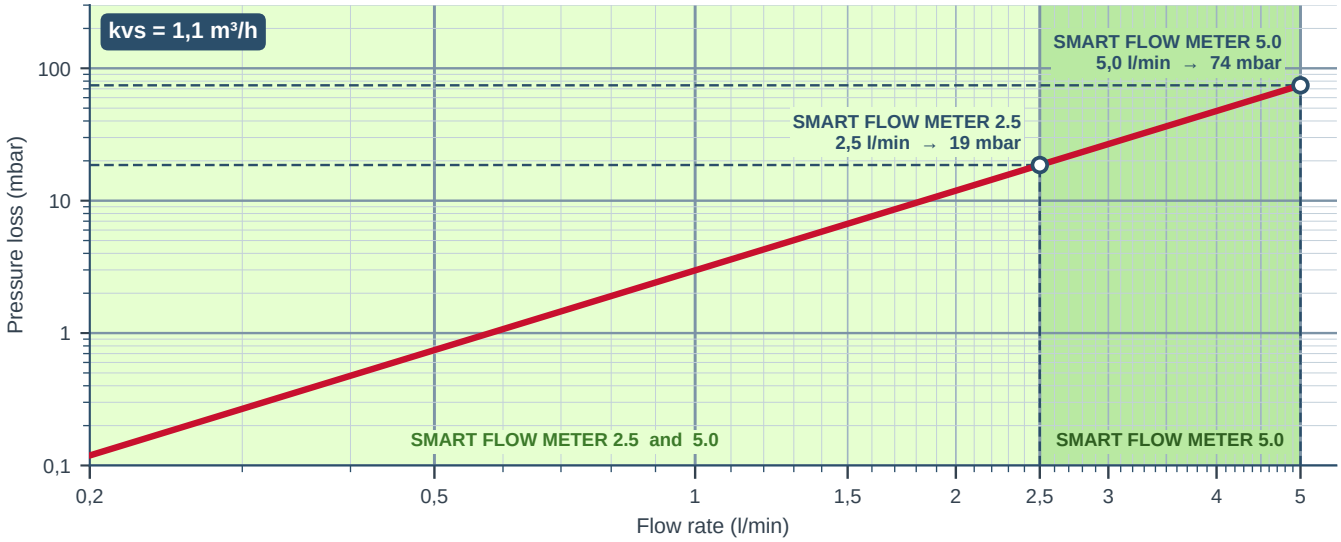

High precision • Low pressure loss • Optimal efficiency

SMART4FLOOR · Am Bornrain 17a · 35091 Cölbe · Germany
Tel.: +49 176 56821380 · Email: sales@smart4floor.de · www.smart4floor.de

PRODUCT CODES

VUB (blue) · VUR (red)

Deutsche Qualität - German quality

UNIVERSAL 1" MANIFOLD BALL VALVE

INTENDED USE

Ball valve designed specifically for installation in underfloor heating and radiator heating manifolds. Enables quick shut-off of the medium in the entire manifold.
Thanks to solid construction, high tightness and easy operation, it is a reliable component to every manifold.

PRODUCT ADVANTAGES

- Ease of operation: One-quarter turn lever for fast opening and closing.
- High tightness: Sealing elements made of high-quality EPDM ensure reliable tightness.
- Corrosion resistance: Nickel-plated brass body provides long-term durability and resistance to corrosion.

PRODUCT SPECIFICATIONS

Product code	Product name
VUR	Manifold ball valve 1” universal red
VUB	Manifold ball valve 1” universal blue





TECHNICAL SPECIFICATIONS

Parameter	Value
Size	1"
DN	20
PN	40
Max. temperature	110°C
Material	Nickel-plated brass
Seals	EPDM

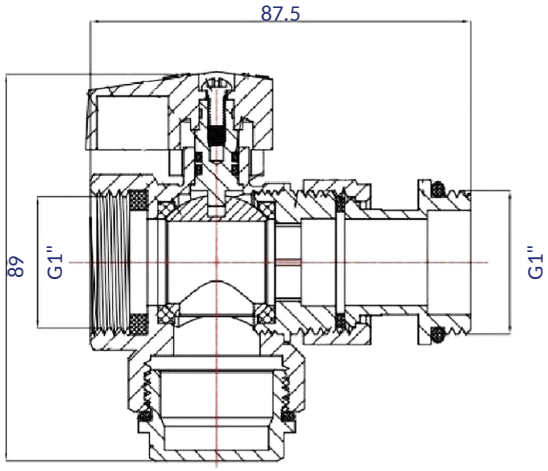

SMART4FLOOR · Am Bornrain 17a · 35091 Cölbe · Germany
Tel.: +49 176 56821380 · Email: sales@smart4floor.de · www.smart4floor.de

MANIFOLD BALL VALVE THERMOMETER

INTENDED USE

Optional component for manifold ball valves. Provides direct and reliable temperature monitoring of the supply and return lines in underfloor and radiator heating systems.

PRODUCT ADVANTAGES

- Fast and clear temperature reading
- Compact design, easy to install
- Durable construction (brass body + stainless steel case)
- Compatible with manifold ball valves

TECHNICAL SPECIFICATIONS

Parameter	Value
Material	Brass body (HPb57-3A), stainless steel case (304)
Case size (dial diameter)	Ø36.5 mm
Temperature range	0–80 °C
Net weight	26.6 g
Product code	TVU





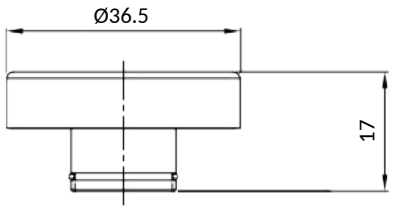

PRODUCT CODES
VSB (blue) · VSR (red)

Deutsche Qualität - German quality

MANIFOLD BALL VALVE 1" STRAIGHT

INTENDED USE

Ball valve designed specifically for installation in underfloor heating and radiator heating manifolds. Enables quick shut-off of the medium in the entire manifold.
Thanks to solid construction, high tightness and easy operation, it is a reliable component to every manifold.

PRODUCT ADVANTAGES

- Ease of operation: One-quarter turn lever for fast opening and closing.
- High tightness: Sealing elements made of high-quality EPDM ensure reliable tightness.
- Corrosion resistance: Stainless steel body provides long-term durability and resistance to corrosion.

PRODUCT SPECIFICATIONS

Product code	Product name
VSB	Manifold ball valve 1” straight blue
VSR	Manifold ball valve 1” straight red

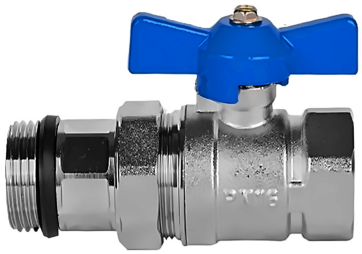

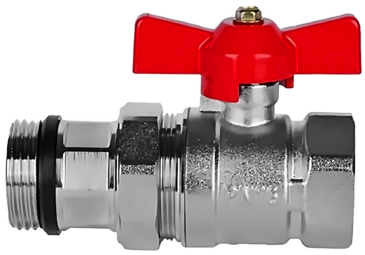

TECHNICAL SPECIFICATIONS

Parameter	Value
Size	1"
DN	25
PN	16
Working temperature	110°C
Material	Stainless steel
Seals	EPDM + PTFE

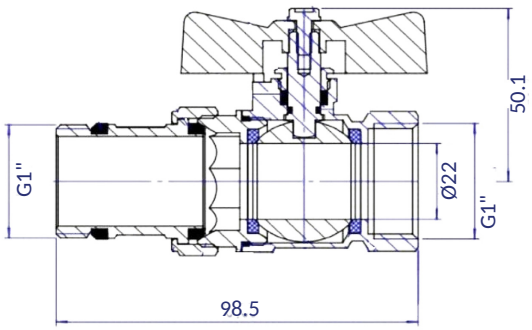

SMART4FLOOR · Am Bornrain 17a · 35091 Cölbe · Germany
Tel.: +49 176 56821380 · Email: sales@smart4floor.de · www.smart4floor.de

MANIFOLD BALL VALVE 1" STRAIGHT WITH THERMOMETER

INTENDED USE

Ball valve designed specifically for installation in underfloor heating and radiator heating manifolds. Enables quick shut-off of the medium in the entire manifold.
Thanks to solid construction, high tightness and easy operation, it is a reliable component to every manifold.

PRODUCT ADVANTAGES

- Ease of operation: One-quarter turn lever for fast opening and closing.
- High tightness: Sealing elements made of high-quality EPDM ensure reliable tightness.
- Corrosion resistance: Stainless steel body provides long-term durability and resistance to corrosion.

PRODUCT SPECIFICATIONS

Product code	Product name
VSBT	Manifold ball valve 1” straight blue with thermometer
VSRT	Manifold ball valve 1” straight red with thermometer

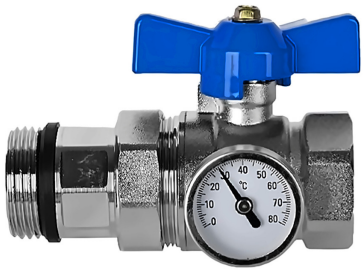



TECHNICAL SPECIFICATIONS

Parameter	Value
Size	1"
DN	25
PN	16
Working temperature	110°C
Material	Stainless steel
Seals	EPDM + PTFE

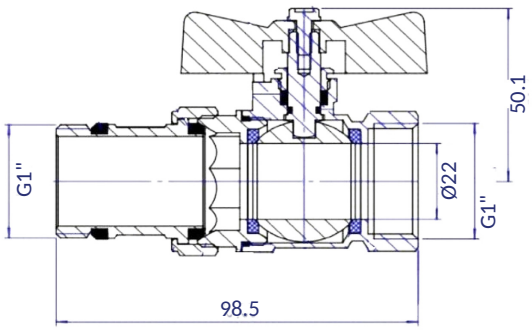

SMART4FLOOR · Am Bornrain 17a · 35091 Cölbe · Germany
Tel.: +49 176 56821380 · Email: sales@smart4floor.de · www.smart4floor.de

PRODUCT CODES

V90B (blue) · V90R (red)

Deutsche Qualität - German quality

MANIFOLD BALL VALVE 1" ANGLE

INTENDED USE

Ball valve designed specifically for installation in underfloor heating and radiator heating manifolds. Enables quick shut-off of the medium in the entire manifold.
Thanks to solid construction, high tightness and easy operation, it is a reliable component to every manifold.

PRODUCT ADVANTAGES

- Ease of operation: One-quarter turn lever for fast opening and closing.
- High tightness: Sealing elements made of high-quality EPDM ensure reliable tightness.
- Corrosion resistance: Stainless steel body provides long-term durability and resistance to corrosion.

PRODUCT SPECIFICATIONS

Product code	Product name
V90B	Manifold ball valve 1” angle blue
V90R	Manifold ball valve 1” angle red





TECHNICAL SPECIFICATIONS

Parameter	Value
Size	1"
DN	25
PN	16
Working temperature	110°C
Material	Stainless steel
Seals	EPDM + PTFE

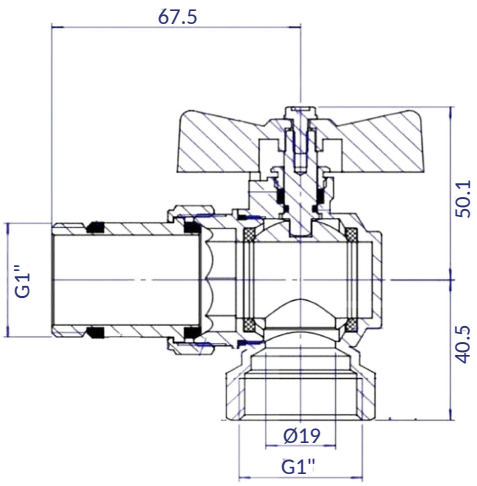

SMART4FLOOR · Am Bornrain 17a · 35091 Cölbe · Germany
Tel.: +49 176 56821380 · Email: sales@smart4floor.de · www.smart4floor.de

PRODUCT CODES
V90BT (blue) · V90RT (red)

Deutsche Qualität - German quality

MANIFOLD BALL VALVE 1" ANGLE WITH THERMOMETER

INTENDED USE

Ball valve designed specifically for installation in underfloor heating and radiator heating manifolds. Enables quick shut-off of the medium in the entire manifold.
Thanks to solid construction, high tightness and easy operation, it is a reliable component to every manifold.

PRODUCT ADVANTAGES

- Ease of operation: One-quarter turn lever for fast opening and closing.
- High tightness: Sealing elements made of high-quality EPDM ensure reliable tightness.
- Corrosion resistance: Stainless steel body provides long-term durability and resistance to corrosion.

PRODUCT SPECIFICATIONS

Product code	Product name
V90BT	Manifold ball valve 1” angle blue with thermometer
V90RT	Manifold ball valve 1” angle red with thermometer



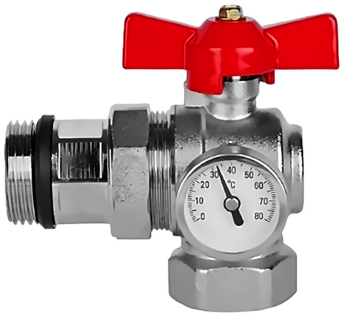

TECHNICAL SPECIFICATIONS

Parameter	Value
Size	1"
DN	25
PN	16
Working temperature	110°C
Material	Stainless steel
Seals	EPDM + PTFE

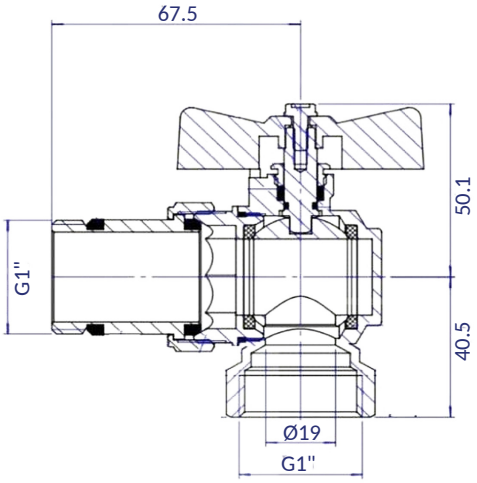

SMART4FLOOR · Am Bornrain 17a · 35091 Cölbe · Germany
Tel.: +49 176 56821380 · Email: sales@smart4floor.de · www.smart4floor.de

SMART CLIP STANDARD 40

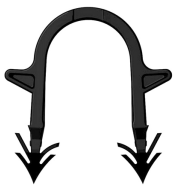



INTENDED USE

U-clip for fastening underfloor heating pipes of 14 to 20 mm diameter onto insulation panels and tacker foils. Fitted with a tacker machine from a standing position, it holds the pipe in place until the screed is poured.

PRODUCT ADVANTAGES

- Universal use in all common tacker machines
- PP / B500 high-technical compound, resistant from –5 °C to +45 °C
- 30-clip taped magazine for fast reloading
- Secure hold of the pipe until the screed is poured
- Made in Germany

TECHNICAL SPECIFICATIONS

Parameter	Value
Model	U-clip for pipe diameter 14–20 mm
Total length	40 mm
Material	PP / B500 high-technical compound
Temperature range	–5 °C to +45 °C
Colour	Black
Magazine	30-clip taped version
Packaging	300 pcs per box, 144 000 pcs per pallet
Compatibility	Universal use in all common tacker machines
Characteristics	Standard design
Origin	Made in Germany

SMART4FLOOR · Am Bornrain 17a · 35091 Cölbe · Germany
Tel.: +49 176 56821380 · Email: sales@smart4floor.de · www.smart4floor.de

SMART CLIP STANDARD 60



INTENDED USE

U-clip for fastening underfloor heating pipes of 14 to 20 mm diameter onto insulation panels and tacker foils. Fitted with a tacker machine from a standing position, it holds the pipe in place until the screed is poured.

PRODUCT ADVANTAGES

- Universal use in all common tacker machines
- PP / B500 high-technical compound, resistant from –5 °C to +45 °C
- 30-clip taped magazine for fast reloading
- Secure hold of the pipe until the screed is poured
- Made in Germany

TECHNICAL SPECIFICATIONS

Parameter	Value
Model	U-clip for pipe diameter 14–20 mm
Total length	57 mm
Material	PP / B500 high-technical compound
Temperature range	–5 °C to +45 °C
Colour	Black
Magazine	30-clip taped version
Packaging	300 pcs per box, 108 000 pcs per pallet
Compatibility	Universal use in all common tacker machines
Characteristics	Standard design
Origin	Made in Germany

SMART4FLOOR · Am Bornrain 17a · 35091 Cölbe · Germany
Tel.: +49 176 56821380 · Email: sales@smart4floor.de · www.smart4floor.de

SMART CLIP PREMIUM 35





INTENDED USE

U-clip for fastening underfloor heating pipes of 14 to 20 mm diameter onto insulation panels and tacker foils. Fitted with a tacker machine from a standing position, it holds the pipe in place until the screed is poured.

PRODUCT ADVANTAGES

- Compact special design
- Active anchor system for a firm grip in the insulation panel
- 2D foil-railing system according to EN 1264-4
- Diamond tip for perfect perforation
- Universal use in all common tacker machines
- PP / B500 high-technical compound, resistant from –5 °C to +45 °C
- Made in Germany

TECHNICAL SPECIFICATIONS

Parameter	Value
Model	U-clip for pipe diameter 14–20 mm
Total length	35 mm
Material	PP / B500 high-technical compound
Temperature range	–5 °C to +45 °C
Colour	Black
Magazine	30-clip taped version
Packaging	300 pcs per box, 144 000 pcs per pallet
Compatibility	Universal use in all common tacker machines
Characteristics	Special design, active anchor, 2D foil-railing, diamond tip
Origin	Made in Germany

SMART4FLOOR · Am Bornrain 17a · 35091 Cölbe · Germany
Tel.: +49 176 56821380 · Email: sales@smart4floor.de · www.smart4floor.de

SMART OMEGA CLIP 50

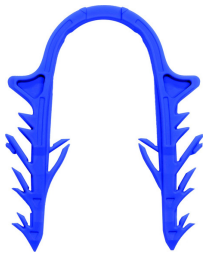

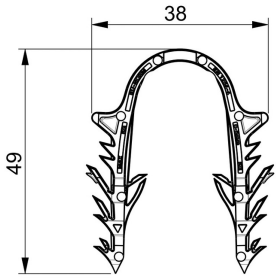

INTENDED USE

Omega clip for fastening underfloor heating pipes of 14 to 20 mm diameter onto insulation panels and tacker foils. Fitted with a tacker machine from a standing position, it holds the pipe in place until the screed is poured.

PRODUCT ADVANTAGES

- Omega design with extreme pull-out force up to 16 kg
- Multi active anchor system for a firm grip in the insulation panel
- 3D foil-railing system according to EN 1264-4
- Anti-rotation safety lockers
- Universal use in all common tacker machines
- PP / B500 high-technical compound, resistant from –5 °C to +35 °C
- Made in Germany

TECHNICAL SPECIFICATIONS

Parameter	Value
Model	Omega clip for pipe diameter 14–20 mm
Total length	49 mm (width 38 mm)
Material	PP / B500 high-technical compound
Temperature range	–5 °C to +35 °C
Colour	Black; blue and other RAL colours on request
Magazine	30–50 clips per magazine, taped or thermowelded
Packaging	300 pcs per box
Compatibility	Universal use in all common tacker machines
Characteristics	Omega design, multi active anchors, 3D foil-railing, anti-rotation lockers
Origin	Made in Germany

SMART4FLOOR · Am Bornrain 17a · 35091 Cölbe · Germany
Tel.: +49 176 56821380 · Email: sales@smart4floor.de · www.smart4floor.de

Deutsche Qualität - German quality

SMART TACKER



High-precision and extremely smooth stapling action

Captive magazine weight with parking position

Extremely robust body and blade made of CNC-milled aluminium

Magazine capacity of up to 120 staples

Inspection flap with quick-release catch

100% Made in Germany

SMART4FLOOR · Am Bornrain 17a · 35091 Cölbe · Germany
Tel.: +49 176 56821380 · Email: sales@smart4floor.de · www.smart4floor.de

SMART TACKER

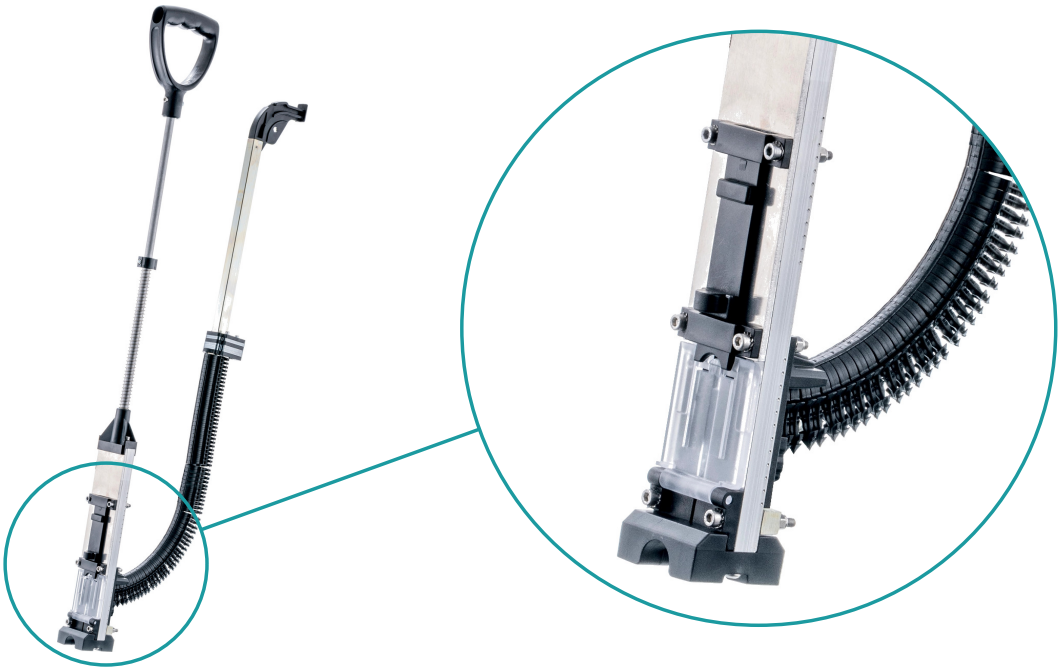

INTENDED USE

Professional tacker for fastening underfloor heating pipes onto insulation panels and tacker foils. Designed for fast and precise stapling from a standing position, it secures the pipe in place before the screed is poured.

TECHNICAL SPECIFICATIONS

Parameter	Value
Product name	SMART TACKER
Compatibility	Almost all commercially available staples of 6 mm thickness and 34–58 mm length, for glued and thermally welded magazines
Magazine capacity	Up to 120 staples
Product features	Very smooth operation, inspection flap with quick-release catch, captive magazine weight with parking position
Materials	Aluminium, plastic
Weight	2.1 kg
Handle height	approx. 900 mm
Range	High Performance – Premium series – Made in Germany

SMART4FLOOR · Am Bornrain 17a · 35091 Cölbe · Germany
Tel.: +49 176 56821380 · Email: sales@smart4floor.de · www.smart4floor.de

Deutsche Qualität - German quality

SMART TACKER 2



High-precision and extremely smooth stapling action

Captive magazine weight with parking position

Extremely robust body and blade made of CNC-milled aluminium

Magazine capacity of up to 120 staples

Integrated wire stand: stands upright on its own

Inspection flap with quick-release catch

100% Made in Germany

SMART4FLOOR · Am Bornrain 17a · 35091 Cölbe · Germany
Tel.: +49 176 56821380 · Email: sales@smart4floor.de · www.smart4floor.de

SMART TACKER 2



INTENDED USE

Professional tacker for fastening underfloor heating pipes onto insulation panels and tacker foils. Designed for fast and precise stapling from a standing position, it secures the pipe in place before the screed is poured.

TECHNICAL SPECIFICATIONS

Parameter	Value
Product name	SMART TACKER 2
Compatibility	Almost all commercially available staples of 6 mm thickness and 34–58 mm length, for glued and thermally welded magazines
Magazine capacity	Up to 120 staples
Product features	Very smooth operation, inspection flap with quick-release catch, captive magazine weight with parking position
Stand	Integrated wire stand: the tacker stands upright on its own
Materials	Aluminium, plastic
Weight	2.5 kg (with stand)
Handle height	approx. 900 mm
Range	High Performance – Premium series – Made in Germany

SMART4FLOOR · Am Bornrain 17a · 35091 Cölbe · Germany
Tel.: +49 176 56821380 · Email: sales@smart4floor.de · www.smart4floor.de

Deutsche Qualität - German quality

SMART HOLDING PIN 42



INTENDED USE

U-shaped holding pin for fixing pipe holding rails, underfloor heating pipes, foils and various rails onto the insulation layer.

PRODUCT ADVANTAGES

- Fixes holding rails, pipes, foils and various rails
- Barbed legs for a secure anchoring in the insulation
- Two lengths (42 mm and 62 mm) to suit the insulation thickness
- Made in Germany

TECHNICAL SPECIFICATIONS

Parameter	Value
Model	Holding pin, length 42 mm
Total length	42 mm
Width	26 mm
Inner diameter	18 mm
Material	PCPT
Colour	Black
Packaging	500 pcs per bag, 1 000 pcs per carton, 120 000 pcs per pallet
Range	Lengths 42 mm and 62 mm
Origin	Made in Germany

SMART4FLOOR · Am Bornrain 17a · 35091 Cölbe · Germany
Tel.: +49 176 56821380 · Email: sales@smart4floor.de · www.smart4floor.de

Deutsche Qualität - German quality

SMART HOLDING PIN 62



INTENDED USE

U-shaped holding pin for fixing pipe holding rails, underfloor heating pipes, foils and various rails onto the insulation layer.

PRODUCT ADVANTAGES

- Fixes holding rails, pipes, foils and various rails
- Barbed legs for a secure anchoring in the insulation
- Two lengths (42 mm and 62 mm) to suit the insulation thickness
- Made in Germany

TECHNICAL SPECIFICATIONS

Parameter	Value
Model	Holding pin, length 62 mm
Total length	62 mm
Width	26 mm
Inner diameter	18 mm
Material	PCPT
Colour	Black
Packaging	500 pcs per bag, 1 000 pcs per carton, 120 000 pcs per pallet
Range	Lengths 42 mm and 62 mm
Origin	Made in Germany

SMART4FLOOR · Am Bornrain 17a · 35091 Cölbe · Germany
Tel.: +49 176 56821380 · Email: sales@smart4floor.de · www.smart4floor.de

Deutsche Qualität - German quality

SMART FOIL CLIP

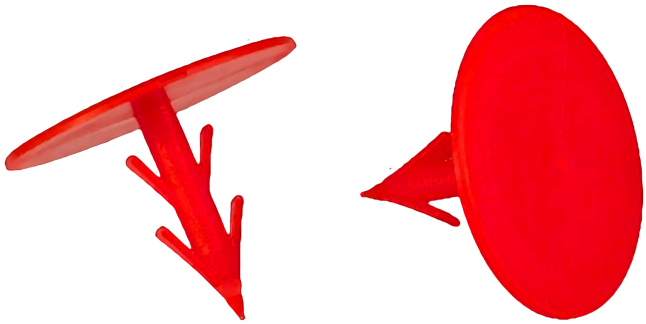

INTENDED USE

Clip for fixing the protective or tacker foil onto the insulation panels before the pipes are laid.

PRODUCT ADVANTAGES

- Quick fixing of the foil onto the insulation
- Polypropylene (PP), red for good visibility on site
- Compact length of 31 mm
- Made in Germany

TECHNICAL SPECIFICATIONS

Parameter	Value
Model	Foil clip
Material	Polypropylene (PP)
Colour	Red
Length	31 mm
Origin	Made in Germany

SMART4FLOOR · Am Bornrain 17a · 35091 Cölbe · Germany
Tel.: +49 176 56821380 · Email: sales@smart4floor.de · www.smart4floor.de

Deutsche Qualität - German quality

SMART PLASTIC LOCK



INTENDED USE

Plastic lock (German: Noppenreiter) for fixing underfloor heating pipes on knob insulation panels with a 75 mm knob interval.

PRODUCT ADVANTAGES

- Holds the pipe securely between the knobs of the panel
- Matches knob panels with a 75 mm interval
- Hooks of 26 mm
- Black
- Made in Germany

TECHNICAL SPECIFICATIONS

Parameter	Value
Model	Plastic lock (Noppenreiter)
Interval	75 mm
Hooks	26 mm
Colour	Black
Origin	Made in Germany

SMART4FLOOR · Am Bornrain 17a · 35091 Cölbe · Germany
Tel.: +49 176 56821380 · Email: sales@smart4floor.de · www.smart4floor.de

SMART MESH CLIP 16/17



INTENDED USE

Clip for fastening underfloor heating pipes directly onto steel reinforcement mesh mats with 3 mm wire. Set with the mesh-clip setting tool, it holds the pipe in place until the screed is poured.

PRODUCT ADVANTAGES

- Direct fixing of the pipe onto 3 mm reinforcement mesh
- BTEC100 premium compound, –5 °C to +35 °C
- Premium-taped magazines of 50 clips for fast reloading
- Black or customised RAL colours
- Made in Germany

TECHNICAL SPECIFICATIONS

Parameter	Value
Model	Mesh clip for 16/17 mm pipes, for 3 mm mesh mats
Material	BTEC100 premium compound for extreme operating conditions
Temperature range	–5 °C to +35 °C
Colour	Black or customised RAL colours
Magazine	50 pcs per magazine, premium-taped
Packaging	500 pcs per bag, 2 500 pcs per box
Range	Version for 16/17 mm pipes and version for 20 mm pipes
Origin	Made in Germany

SMART4FLOOR · Am Bornrain 17a · 35091 Cölbe · Germany
Tel.: +49 176 56821380 · Email: sales@smart4floor.de · www.smart4floor.de

Deutsche Qualität - German quality

SMART MESH CLIP 20



INTENDED USE

Clip for fastening underfloor heating pipes directly onto steel reinforcement mesh mats with 3 mm wire. Set with the mesh-clip setting tool, it holds the pipe in place until the screed is poured.

PRODUCT ADVANTAGES

- Direct fixing of the pipe onto 3 mm reinforcement mesh
- BTEC100 premium compound, –5 °C to +35 °C
- Premium-taped magazines of 50 clips for fast reloading
- Black or customised RAL colours
- Made in Germany

TECHNICAL SPECIFICATIONS

Parameter	Value
Model	Mesh clip for 20 mm pipes, for 3 mm mesh mats
Material	BTEC100 premium compound for extreme operating conditions
Temperature range	–5 °C to +35 °C
Colour	Black or customised RAL colours
Magazine	50 pcs per magazine, premium-taped
Packaging	500 pcs per bag, 2 500 pcs per box
Range	Version for 16/17 mm pipes and version for 20 mm pipes
Origin	Made in Germany

SMART4FLOOR · Am Bornrain 17a · 35091 Cölbe · Germany
Tel.: +49 176 56821380 · Email: sales@smart4floor.de · www.smart4floor.de

SMART RAILS





INTENDED USE

Holding rail for fastening underfloor heating pipes of 16 to 20 mm outer diameter onto insulation panels. It clips the pipe at a fixed 50 mm spacing and holds it in place until the screed is poured.

PRODUCT ADVANTAGES

- Snap-on connection for flexible joining of the individual elements
- Prevents the heating pipe from popping out during installation
- Fixed 50 mm pipe laying distance – for floor and wall mounting
- Double-sided adhesive tape or manual fixing clips 42 / 62 mm
- PP / B500 premium compound, resistant from –5 °C to +35 °C

TECHNICAL SPECIFICATIONS

Parameter	Value
Model	Holding rail for pipe diameter 16–20 mm
Element dimensions	1 000 × 45 × 28 mm (l × w × h), supplied as 4 × 25 cm = 1 m
Pipe laying distance	50 mm
Material	PP / B500 premium compound
Temperature range	–5 °C to +35 °C
Colour	Black
Assembly	Snap-on connection for flexible fixation of the elements
Fastening systems	Double-sided adhesive tape, or manual clips 42 / 62 mm
Versions	Fully pre-taped (self-adhesive) or plain, without adhesive
Application	Floor and wall mounting – walkable, high load-bearing strength
Packaging	100 m per box, 1 500 m per pallet

SMART4FLOOR · Am Bornrain 17a · 35091 Cölbe · Germany
Tel.: +49 176 56821380 · Email: sales@smart4floor.de · www.smart4floor.de

SMART BENDS





INTENDED USE

Bend support for the 90-degree redirection of underfloor heating pipes of 12 to 25 mm. It guides the pipe through the turn, holds the radius and protects it against kinking.

PRODUCT ADVANTAGES

- Optimal 90-degree pipe routing
- Safe protection of the pipe through the bend
- Four sizes covering pipe diameters from 12 to 25 mm
- Optionally available with reinforced guide
- Reinforced thermopolymer, heat resistant and extremely durable

TECHNICAL SPECIFICATIONS

Parameter	Value
Model	Bend support for underfloor heating pipes 12–25 mm
Function	90-degree redirection and guiding of the pipe
Material	Reinforced thermopolymer, heat resistant, extremely durable
Colour	Black
Sizes	110 × 110, 140 × 140, 150 × 150 and 160 × 160 mm
Pipe diameters	12–16 mm, 14–18 mm, 20 mm and 25 mm
Pipe protection	Safe protection of the pipe at the point of the bend
Options	Also available with reinforced guide
Packaging	Box: 400 pcs (14–18 mm, in bags of 50), 100 pcs (20 mm), 80 pcs (25 mm)
Pallet	6 400 pcs (14–18 mm), 3 200 pcs (20 mm), 2 560 pcs (25 mm)

SMART4FLOOR · Am Bornrain 17a · 35091 Cölbe · Germany
Tel.: +49 176 56821380 · Email: sales@smart4floor.de · www.smart4floor.de

SMART SCREED MEASURING POINT SCREEDFLEX – BARBED TIP



INTENDED USE

Measuring point placed in the screed area before pouring. It marks the places where screed samples are taken for the residual-moisture measurement before the floor covering is laid (DIN 4725 as cited by the manufacturer).

PRODUCT ADVANTAGES

- Flexible plastic, practically indestructible on site
- Clearly marks the screed sampling points
- Customised RAL colours available
- Two versions: barbed tip or adhesive plate
- Made in Germany

TECHNICAL SPECIFICATIONS

Parameter	Value
Model	Screed measuring point Screedflex, with barbed tip
Material	Polyethylene (PE) + rubber, indestructible
Height	approx. 180 mm
Colour	Customised RAL colours
Versions	With barbed tip / with adhesive plate
Origin	Made in Germany

SMART4FLOOR · Am Bornrain 17a · 35091 Cölbe · Germany
Tel.: +49 176 56821380 · Email: sales@smart4floor.de · www.smart4floor.de

Deutsche Qualität - German quality

SMART SCREED MEASURING POINT SCREEDFLEX – ADHESIVE PLATE



INTENDED USE

Measuring point placed in the screed area before pouring. It marks the places where screed samples are taken for the residual-moisture measurement before the floor covering is laid (DIN 4725 as cited by the manufacturer).

PRODUCT ADVANTAGES

- Flexible plastic, practically indestructible on site
- Clearly marks the screed sampling points
- Customised RAL colours available
- Two versions: barbed tip or adhesive plate
- Made in Germany

TECHNICAL SPECIFICATIONS

Parameter	Value
Model	Screed measuring point Screedflex, with adhesive plate
Material	Polyethylene (PE) + rubber, indestructible
Height	approx. 180 mm
Colour	Customised RAL colours
Versions	With barbed tip / with adhesive plate
Origin	Made in Germany

SMART4FLOOR · Am Bornrain 17a · 35091 Cölbe · Germany
Tel.: +49 176 56821380 · Email: sales@smart4floor.de · www.smart4floor.de

Deutsche Qualität - German quality

The Quality Touch

SMART4FLOOR

Am Bornrain 17a · 35091 Cölbe · Germany

Tel. +49 176 56821380

sales@smart4floor.de

www.smart4floor.de

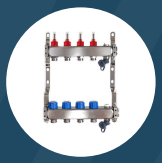
Manifolds


Flow meters


Ball valves


U-clips


Tacker


Rails


Bends

Subject to technical changes. Edit 2026 12 01B.

All representations in this catalogue are illustrations and are not binding on SMART4FLOOR.