PRODUCT CODES
VSB (blue) · VSR (red)

Datasheet

Deutsche Qualität - German quality

MANIFOLD BALL VALVE 1" STRAIGHT

INTENDED USE

Ball valve designed specifically for installation in underfloor heating and radiator heating manifolds. Enables quick shut-off of the medium in the entire manifold.
Thanks to solid construction, high tightness and easy operation, it is a reliable component to every manifold.

PRODUCT ADVANTAGES

- Ease of operation: One-quarter turn lever for fast opening and closing.
- High tightness: Sealing elements made of high-quality EPDM ensure reliable tightness.
- Corrosion resistance: Stainless steel body provides long-term durability and resistance to corrosion.

PRODUCT SPECIFICATIONS

Product code	Product name
VSB	Manifold ball valve 1” straight blue
VSR	Manifold ball valve 1” straight red

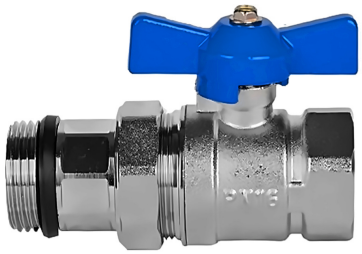

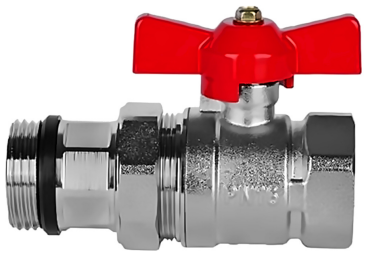

TECHNICAL SPECIFICATIONS

Parameter	Value
Size	1"
DN	25
PN	16
Working temperature	110°C
Material	Stainless steel
Seals	EPDM + PTFE

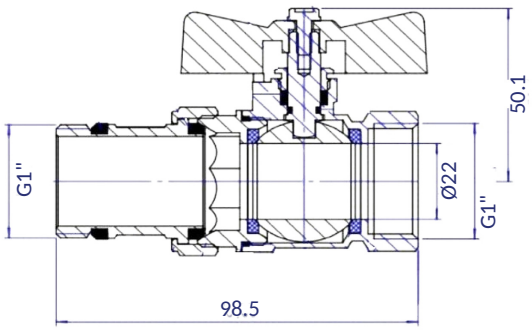

SMART4FLOOR · Am Bornrain 17a · 35091 Cölbe · Germany
Tel.: +49 176 56821380 · Email: sales@smart4floor.de · www.smart4floor.de

PRODUCT CODES
VSBT (blue) · VSRT (red)

Datasheet

Deutsche Qualität - German quality

MANIFOLD BALL VALVE 1" STRAIGHT WITH THERMOMETER

INTENDED USE

Ball valve designed specifically for installation in underfloor heating and radiator heating manifolds. Enables quick shut-off of the medium in the entire manifold.
Thanks to solid construction, high tightness and easy operation, it is a reliable component to every manifold.

PRODUCT ADVANTAGES

- Ease of operation: One-quarter turn lever for fast opening and closing.
- High tightness: Sealing elements made of high-quality EPDM ensure reliable tightness.
- Corrosion resistance: Stainless steel body provides long-term durability and resistance to corrosion.

PRODUCT SPECIFICATIONS

Product code	Product name
VSBT	Manifold ball valve 1” straight blue with thermometer
VSRT	Manifold ball valve 1” straight red with thermometer

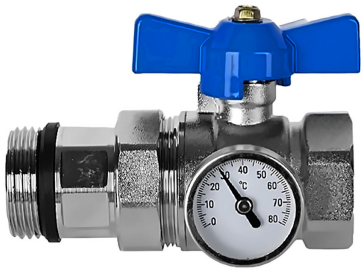



TECHNICAL SPECIFICATIONS

Parameter	Value
Size	1"
DN	25
PN	16
Working temperature	110°C
Material	Stainless steel
Seals	EPDM + PTFE

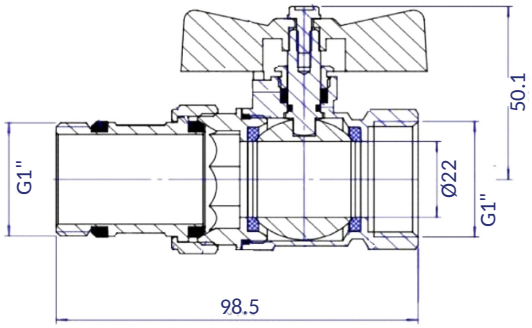

SMART4FLOOR · Am Bornrain 17a · 35091 Cölbe · Germany
Tel.: +49 176 56821380 · Email: sales@smart4floor.de · www.smart4floor.de

PRODUCT CODES
V90B (blue) · V90R (red)

Datasheet

Deutsche Qualität - German quality

MANIFOLD BALL VALVE 1" ANGLE

INTENDED USE

Ball valve designed specifically for installation in underfloor heating and radiator heating manifolds. Enables quick shut-off of the medium in the entire manifold.
Thanks to solid construction, high tightness and easy operation, it is a reliable component to every manifold.

PRODUCT ADVANTAGES

- Ease of operation: One-quarter turn lever for fast opening and closing.
- High tightness: Sealing elements made of high-quality EPDM ensure reliable tightness.
- Corrosion resistance: Stainless steel body provides long-term durability and resistance to corrosion.

PRODUCT SPECIFICATIONS

Product code	Product name
V90B	Manifold ball valve 1” angle blue
V90R	Manifold ball valve 1” angle red





TECHNICAL SPECIFICATIONS

Parameter	Value
Size	1"
DN	25
PN	16
Working temperature	110°C
Material	Stainless steel
Seals	EPDM + PTFE

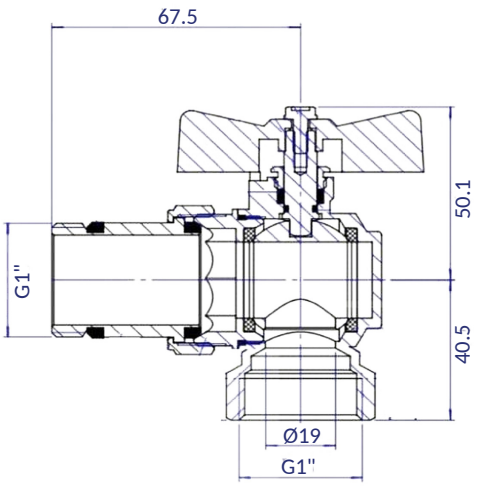

SMART4FLOOR · Am Bornrain 17a · 35091 Cölbe · Germany
Tel.: +49 176 56821380 · Email: sales@smart4floor.de · www.smart4floor.de

PRODUCT CODES
V90BT (blue) · V90RT (red)

Datasheet

Deutsche Qualität - German quality

MANIFOLD BALL VALVE 1" ANGLE WITH THERMOMETER

INTENDED USE

Ball valve designed specifically for installation in underfloor heating and radiator heating manifolds. Enables quick shut-off of the medium in the entire manifold.
Thanks to solid construction, high tightness and easy operation, it is a reliable component to every manifold.

PRODUCT ADVANTAGES

- Ease of operation: One-quarter turn lever for fast opening and closing.
- High tightness: Sealing elements made of high-quality EPDM ensure reliable tightness.
- Corrosion resistance: Stainless steel body provides long-term durability and resistance to corrosion.

PRODUCT SPECIFICATIONS

Product code	Product name
V90BT	Manifold ball valve 1” angle blue with thermometer
V90RT	Manifold ball valve 1” angle red with thermometer



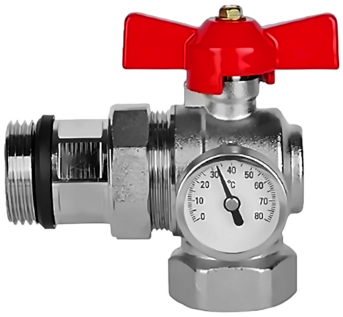

TECHNICAL SPECIFICATIONS

Parameter	Value
Size	1"
DN	25
PN	16
Working temperature	110°C
Material	Stainless steel
Seals	EPDM + PTFE

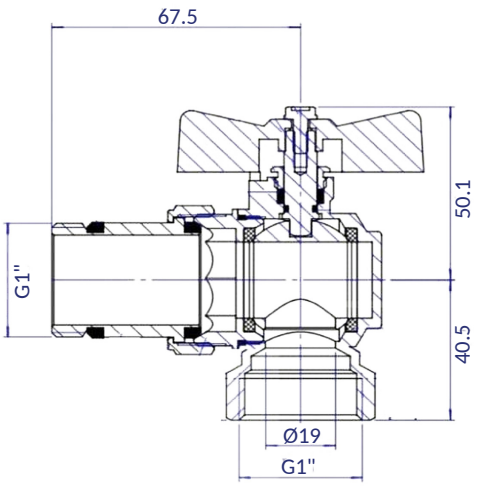

SMART4FLOOR · Am Bornrain 17a · 35091 Cölbe · Germany
Tel.: +49 176 56821380 · Email: sales@smart4floor.de · www.smart4floor.de

PRODUCT CODES
VUB (blue) · VUR (red)

Datasheet

Deutsche Qualität - German quality

UNIVERSAL 1" MANIFOLD BALL VALVE

INTENDED USE

Ball valve designed specifically for installation in underfloor heating and radiator heating manifolds. Enables quick shut-off of the medium in the entire manifold.
Thanks to solid construction, high tightness and easy operation, it is a reliable component to every manifold.

PRODUCT ADVANTAGES

- Ease of operation: One-quarter turn lever for fast opening and closing.
- High tightness: Sealing elements made of high-quality EPDM ensure reliable tightness.
- Corrosion resistance: Nickel-plated brass body provides long-term durability and resistance to corrosion.

PRODUCT SPECIFICATIONS

Product code	Product name
VUR	Manifold ball valve 1” universal red
VUB	Manifold ball valve 1” universal blue





TECHNICAL SPECIFICATIONS

Parameter	Value
Size	1"
DN	20
PN	40
Max. temperature	110°C
Material	Nickel-plated brass
Seals	EPDM

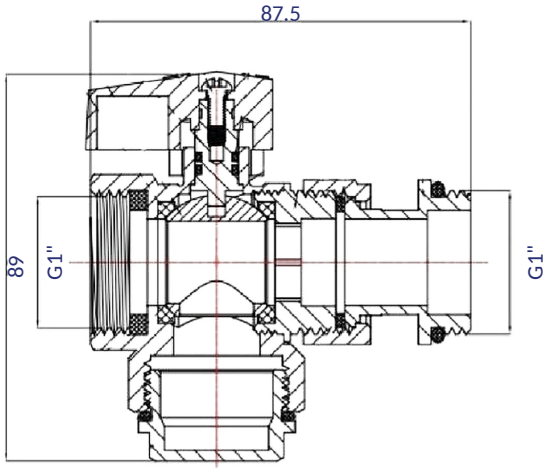

SMART4FLOOR · Am Bornrain 17a · 35091 Cölbe · Germany
Tel.: +49 176 56821380 · Email: sales@smart4floor.de · www.smart4floor.de

PRODUCT CODE
TVU

Datasheet

Deutsche Qualität - German quality

MANIFOLD BALL VALVE THERMOMETER

INTENDED USE

Optional component for manifold ball valves. Provides direct and reliable temperature monitoring of the supply and return lines in underfloor and radiator heating systems.

PRODUCT ADVANTAGES

- Fast and clear temperature reading
- Compact design, easy to install
- Durable construction (brass body + stainless steel case)
- Compatible with manifold ball valves

TECHNICAL SPECIFICATIONS

Parameter	Value
Material	Brass body (HPb57-3A), stainless steel case (304)
Case size (dial diameter)	Ø36.5 mm
Temperature range	0–80 °C
Net weight	26.6 g
Product code	TVU





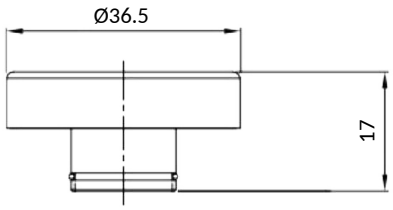

SMART4FLOOR · Am Bornrain 17a · 35091 Cölbe · Germany
Tel.: +49 176 56821380 · Email: sales@smart4floor.de · www.smart4floor.de