PRODUCT CODES

PTSE-N1-02 to PTSE-N1-18

Datasheet

Deutsche Qualität - German quality

STAINLESS STEEL MANIFOLD WITH MANUAL KEY-OPERATED VENT PTSE-N1

INTENDED USE

The SMART stainless-steel manifold is engineered to distribute heating fluid throughout underfloor heating systems. It allows for precise flow control in each circuit, ensuring efficient and reliable operation of the entire system.

PRODUCT ADVANTAGES

- Corrosion resistance – Thanks to high-quality stainless steel, the manifolds ensure long lasting and reliable performance even in demanding conditions
- Easy installation and servicing – The design allows for quick assembly and easy connection of underfloor heating circuits
- Precision manufacturing – Advanced CNC machines and assembly robots guarantee top quality and accuracy of every component

TECHNICAL SPECIFICATIONS

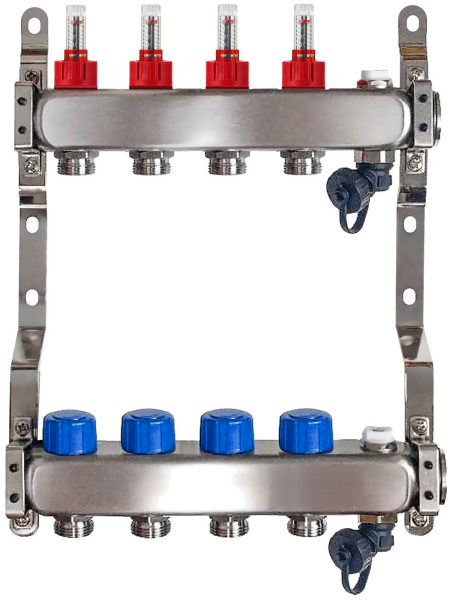

Parameter	Value
Maximum Temperature	60°C
Maximum Pressure	0,6 MPa
Number of sections	2-18
Connection diameter of the manifold bar	1"
Hole diameter in the manifold bar	1/2"
Manifold profile height	40 mm
Section spacing	50 mm
Thread of thermostatic insert	M30x1.5
Material of bars Corrosion -resistant steel grade	SUS 304 / 1.4304

SMART4FLOOR · Am Bornrain 17a · 35091 Cölbe · Germany

Tel.: +49 176 56821380 · Email: sales@smart4floor.de · www.smart4floor.de

PRODUCT CODES

PTSE-N1-02 to PTSE-N1-18

Deutsche Qualität - German quality

Datasheet

STAINLESS STEEL MANIFOLD WITH MANUAL KEY-OPERATED VENT PTSE-N1

Product code	Number of heating circuits (sections)	d (mm)	D (mm)	h, mm	H, mm	L, mm	N, mm	k, mm
PTSE-N1-02	2	35	70	235	334	204	50	38
PTSE-N1-03	3	35	70	235	334	254	50	38
PTSE-N1-04	4	35	70	235	334	304	50	38
PTSE-N1-05	5	35	70	235	334	354	50	38
PTSE-N1-06	6	35	70	235	334	404	50	38
PTSE-N1-07	7	35	70	235	334	454	50	38
PTSE-N1-08	8	35	70	235	334	504	50	38
PTSE-N1-09	9	35	70	235	334	554	50	38
PTSE-N1-10	10	35	70	235	334	604	50	38
PTSE-N1-11	11	35	70	235	334	654	50	38
PTSE-N1-12	12	35	70	235	334	704	50	38
PTSE-N1-13	13	35	70	235	334	754	50	38
PTSE-N1-14	14	35	70	235	334	804	50	38
PTSE-N1-15	15	35	70	235	334	854	50	38
PTSE-N1-16	16	35	70	235	334	904	50	38
PTSE-N1-17	17	35	70	235	334	954	50	38
PTSE-N1-18	18	35	70	235	334	1004	50	38

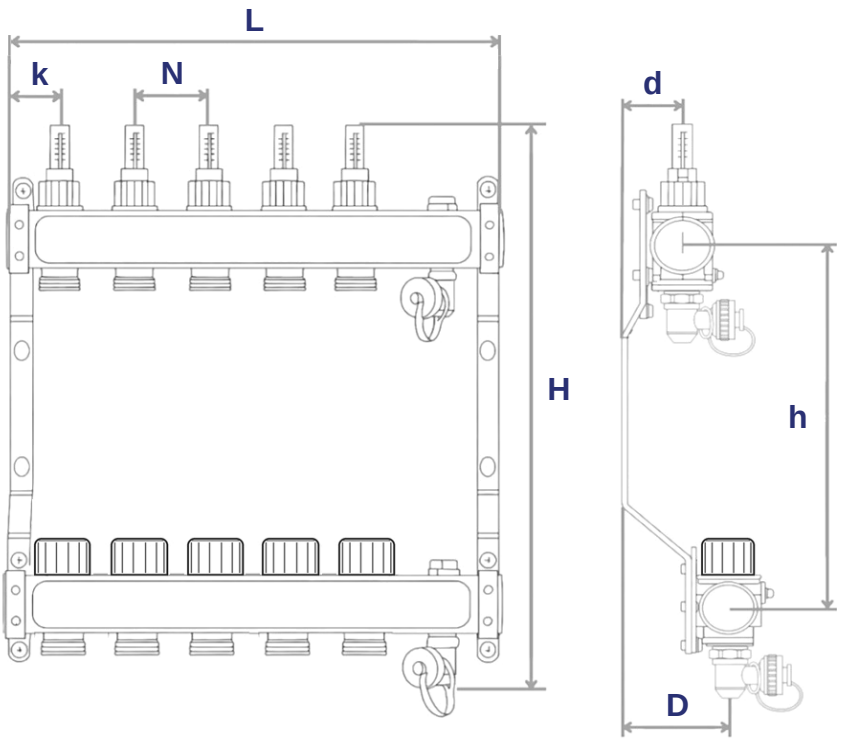

SMART4FLOOR · Am Bornrain 17a · 35091 Cölbe · Germany

Tel.: +49 176 56821380 · Email: sales@smart4floor.de · www.smart4floor.de

PRODUCT CODES

SMART FLOW METER 2.5 · SMART FLOW METER 5.0

Deutsche Qualität - German quality

Datasheet

SMART FLOW METER

INTENDED USE

Flow meter for underfloor heating manifolds. It measures the water flow in each heating circuit, for efficient management and control of the heating system and better overall performance.



PRODUCT ADVANTAGES

- Precise flow measurement for optimising the system
- Resistant to high temperatures and pressure
- Clear flow indicator, easy to read
- Quick installation into existing heating systems

TECHNICAL SPECIFICATIONS

Parameter	Value
Function	Measurement of the water flow per heating circuit
Material	High-quality plastic, resistant to corrosion and high temperatures
Design	Clear flow indicator
Maximum temperature	60 °C
Maximum pressure	0,6 MPa
Nominal diameter	DN 15
Allowed medium	Water with glycol (up to 50 % glycol)
Adjustment range	2,5 l/min or 5 l/min
Flow meter weight	25 g
Nipple weight	45 g
Packaging	Bulk, 100 pcs

SMART4FLOOR · Am Bornrain 17a · 35091 Cölbe · Germany

Tel.: +49 176 56821380 · Email: sales@smart4floor.de · www.smart4floor.de

PRODUCT CODES

SMART FLOW METER 2.5 · SMART FLOW METER 5.0

Datasheet

Deutsche Qualität - German quality

SMART FLOW METER

COMPONENTS AND MATERIALS

No.	Name	Material	Colour
1	Valve body	PPA	black
2	Black core	EMS-GV-5H	black
3	Glass tube	EMS-TR55	transparent
4	Positioning ring	PC	red
5	Red ring	PA66	red
6	O-ring	EPDM 70°	black
7	Black rod	PPS	black
8	Cap	POM	black
9	O-ring	EPDM 70°	black
10	O-ring	EPDM 70°	black
11	O-ring	EPDM 70°	black
12	O-ring	EPDM 70°	black
13	O-ring	EPDM 70°	black
14	Sealing pad	EPDM 70°	black
15	Spring	SS304	—

TECHNICAL DRAWING

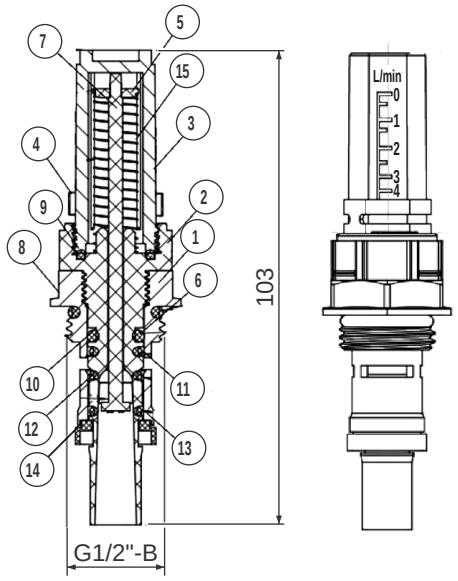

PRESSURE LOSS DIAGRAM

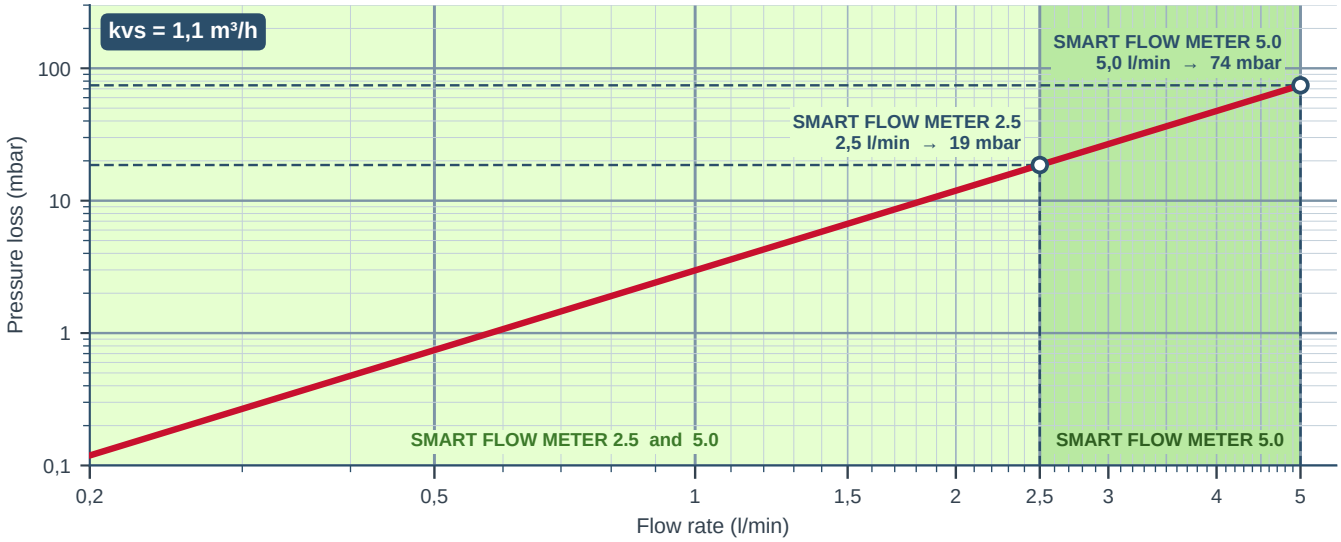

High precision • Low pressure loss • Optimal efficiency

SMART4FLOOR · Am Bornrain 17a · 35091 Cölbe · Germany

Tel.: +49 176 56821380 · Email: sales@smart4floor.de · www.smart4floor.de